SG12864B (128 DOTS X 64 DOTS)

■ FEATURES

- ◆ BUILT-IN CONTROLLER (SBN6400G OR EQUIVALENT)
- ◆ +5 V POWER SUPPLY
- ◆ 1/64 DUTY CYCLE
- ◆ 8-BIT PARALLEL INTERFACE

■ MECHANICAL DATA

ITEM	DIMENSIONS	UNIT
Module Size (W x H x T)	93.0 x 70.0 x 8.7	mm
Viewing Area (W x H)	78.0 x 46.0	mm
Active Area (W x H)	66.52 x 33.24	mm
Dot Size (W x H)	0.48 x 0.48	mm
Dot Pitch (W x H)	0.52 x 0.52	mm

■ INTERFACE PIN CONNECTIONS

NO.	SYMBOL	LEVEL	FUNCTION
1	V_{SS}	0V	Power Supply Ground
2	V_{DD}	5V	Power Supply Voltage
3	V_O	-	Contrast Adjustment Voltage
4	D/I	H/L	L : Data, H : Instruction Code
5	R/W	H/L	H : Read / L : Wrtie
6	E	H→L	Enable Signal
7~14	DB0~DB7	H/L	Data Bus Line
15	CS1	H	Chip Select Signal For IC1
16	CS2	H	Chip Select Signal For IC2
17	/RES	L	Reset Signal
18	Vout	-	Power Supply Voltage For LCD
19	K	0V	LED Power (-)
20	A	4.2V	LED Power (+)

■ ABSOLUTE MAXIMUM RATINGS

ITEM	SYMBOL	MIN.	TYP.	MAX.	UNIT
Supply Voltage For Logic	V_{DD}-V_{SS}	0	-	7	V
Supply Voltage For LCD Drive	V_{DD}-V_o	0	-	14	V
Input Voltage	V_I	V_{SS}	-	V_{DD}	V

■ ELECTRICAL CHARACTERISTICS

ITEM		SYMBOL	CONDITION	MIN.	TYP.	MAX.	UNIT
Supply Voltage For Logic		V_{DD}-V_{SS}	-	4.5	5.0	5.5	V
Supply Voltage For LCD		V_{DD}-V_o	V_{DD}=5V Ta=25℃	7.6	8.5	9.2	V
Supply Current		I_{DD}	V_{DD}=5V	-	2.4	3.5	mA
Input Voltage	"HIGH" Level	V_{IH}	-	2.2	-	V_{DD}	V
	"LOW" Level	V_{IL}	-	-	-	0.6	V
Output Voltage	"HIGH" Level	V_{OH}	-	2.4	-	-	V
	"LOW" Level	V_{OL}	-	-	-	0.4	V
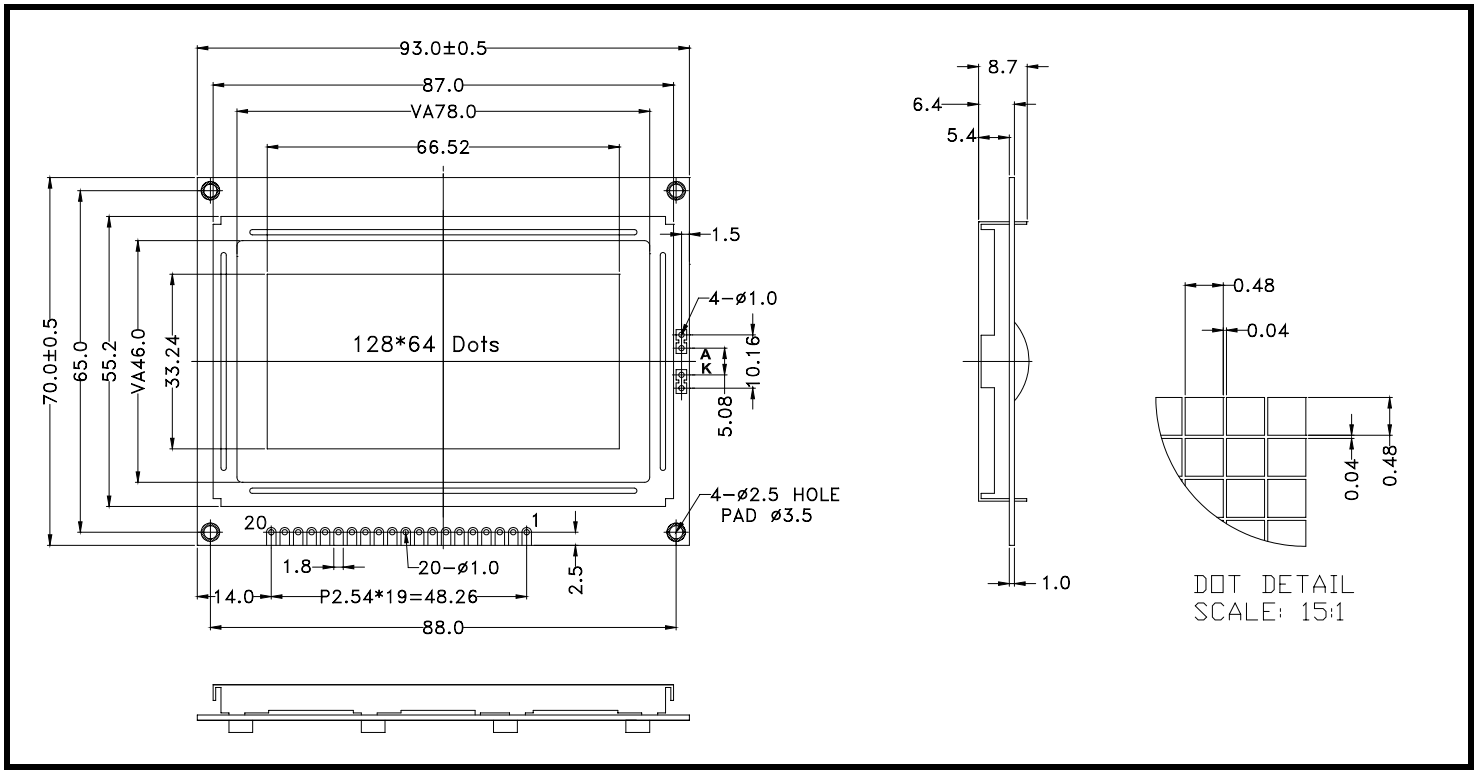
■ EXTERNAL DIMENSIONS